Cable For Connection Of XCOM Remote Module to XCOM Radio

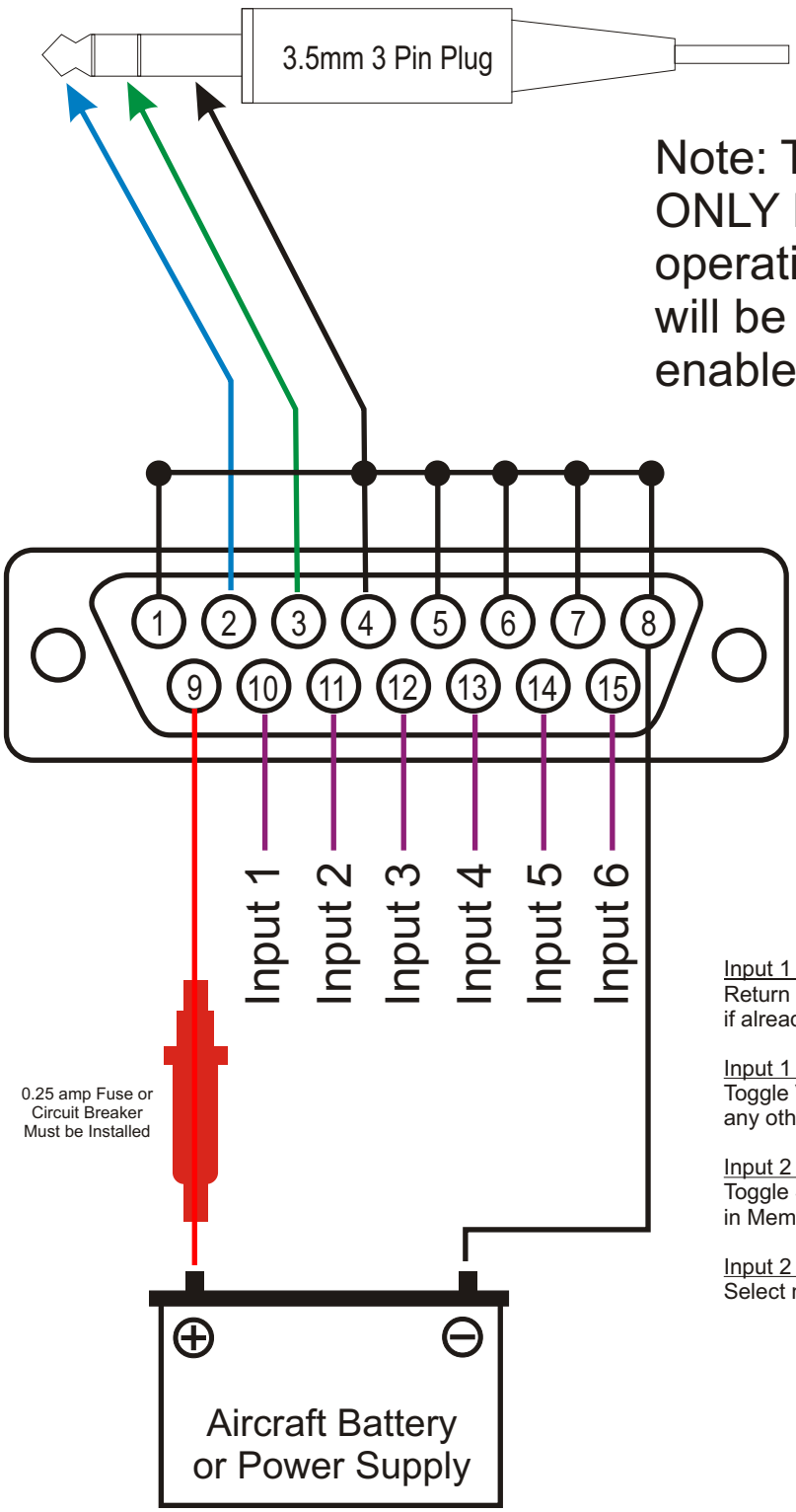

Note: This release of module ONLY has the first 2 Inputs operational. The software will be updated shortly to enable all 6 inputs (12 functions)

Viewing the back of the DB15 Female plug

Input 1 Momentary Push
Return to main screen or toggle active and standby frequencies if already on main screen

Input 1 Long Push
Toggle View between Default and Mem View if the radio is in any other screen, it will return to Default view

Input 2 Momentary Push
Toggle Scan Mode in default view this toggles Dual Watch and in Mem View this toggles memory scanning.

Input 2 Long Push
Select next memory channel